PolyVision®
a steelcase company

# ēno™ interactive whiteboard
## quickstart installation guide (drywall)

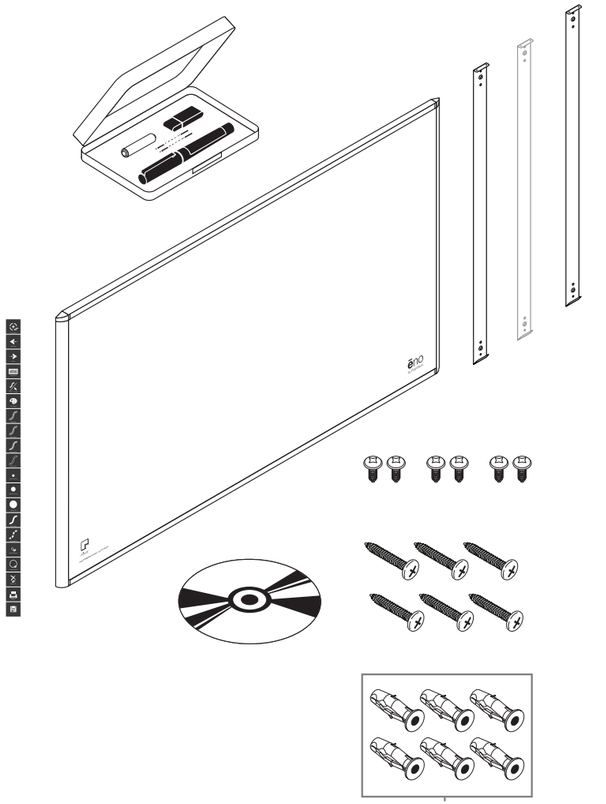

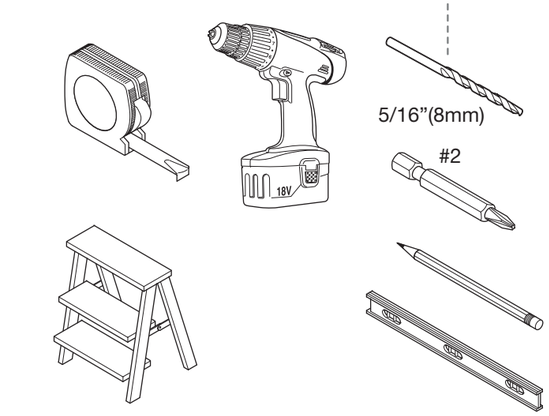


1

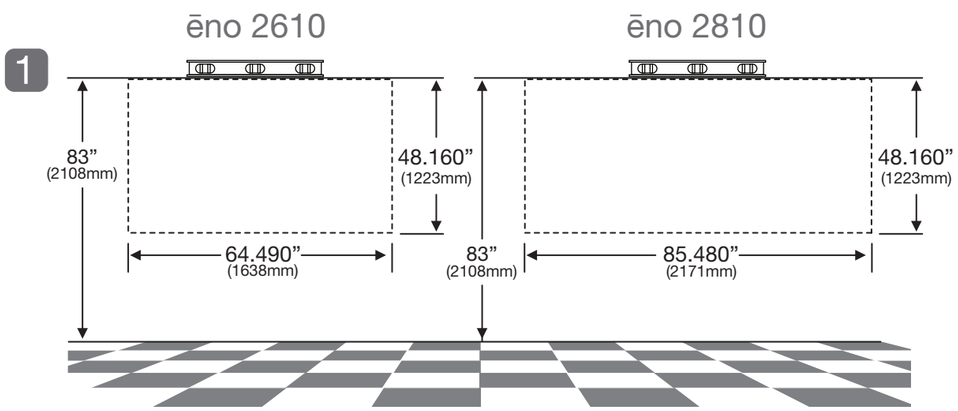


2

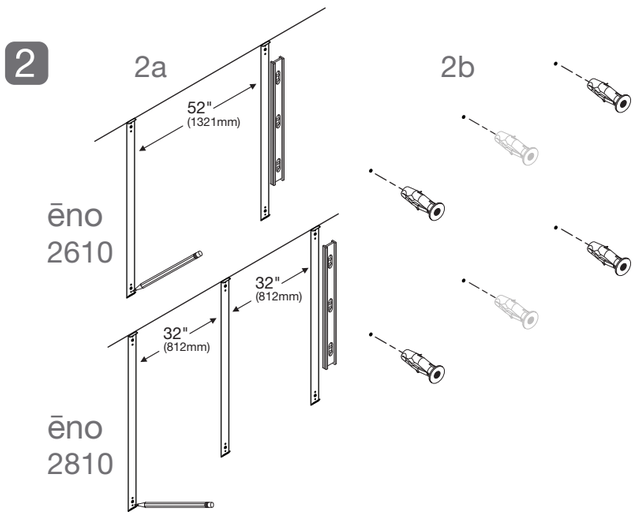


3

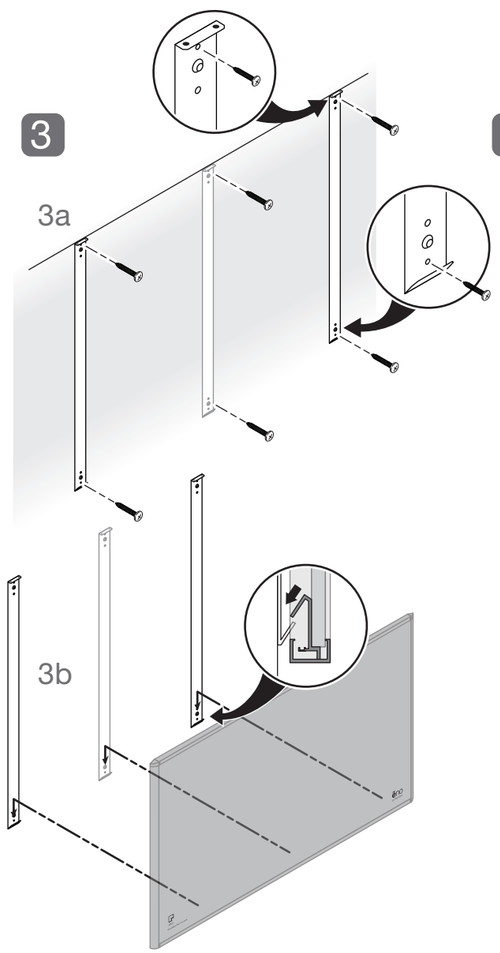


4

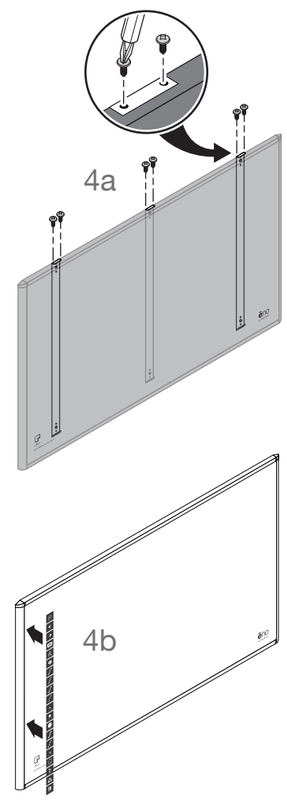


5

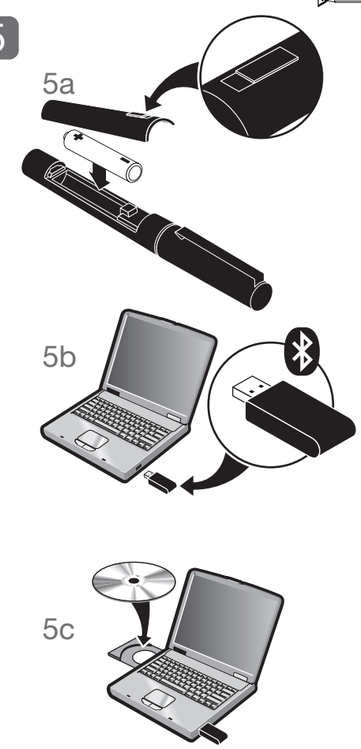


6

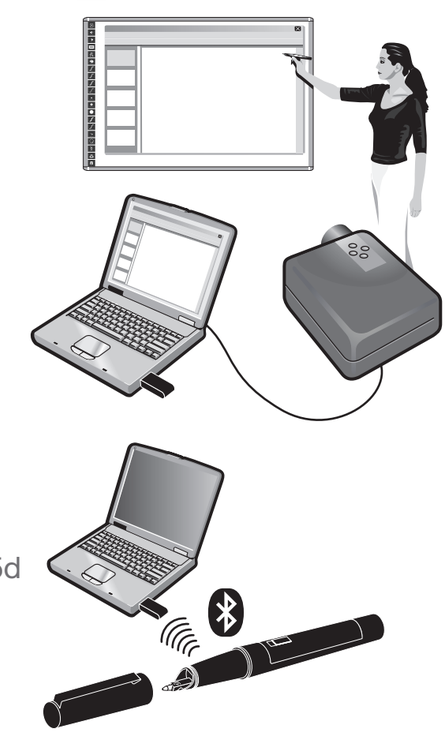

800.620.POLY | 678.542.3100 | +32.089.32.31.30

PN 370-0256-04

PolyVision®
a steelcase company

# ēno™ interactive whiteboard
## quickstart installation guide (concrete)

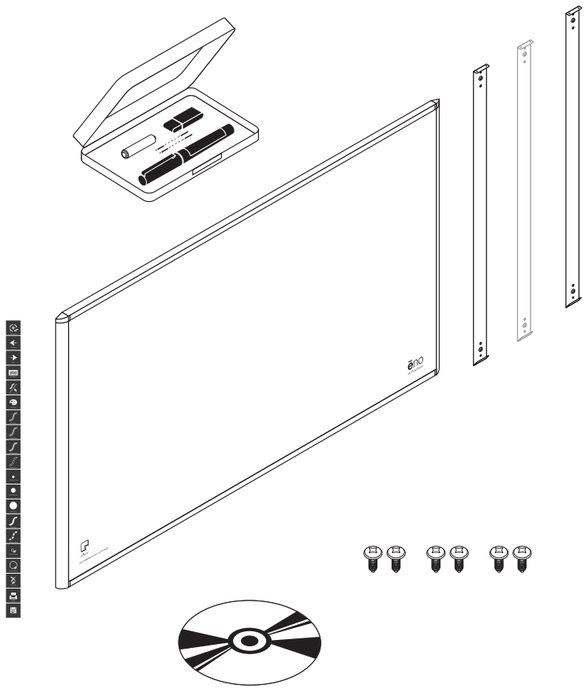

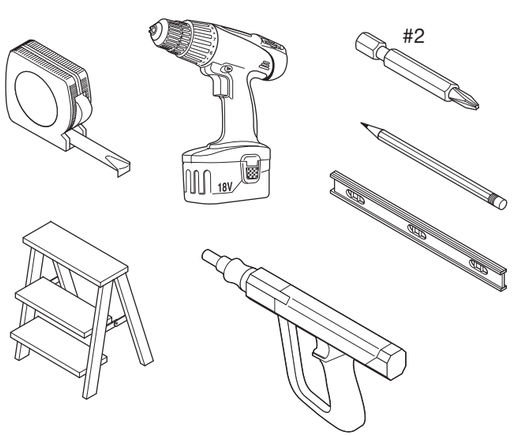


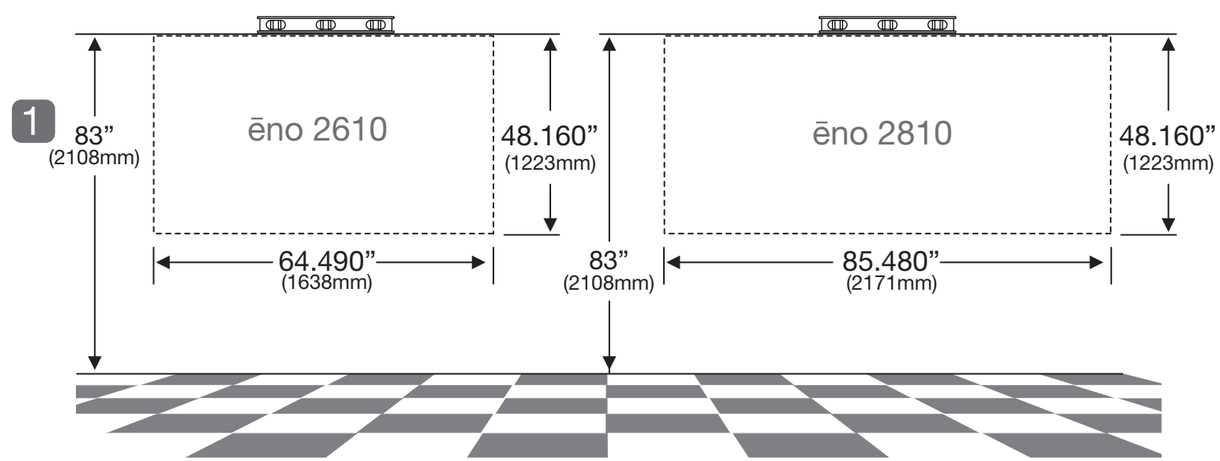


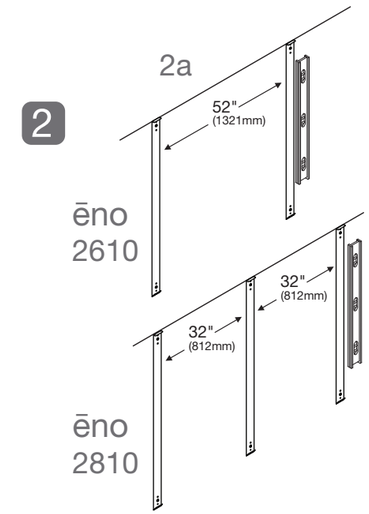


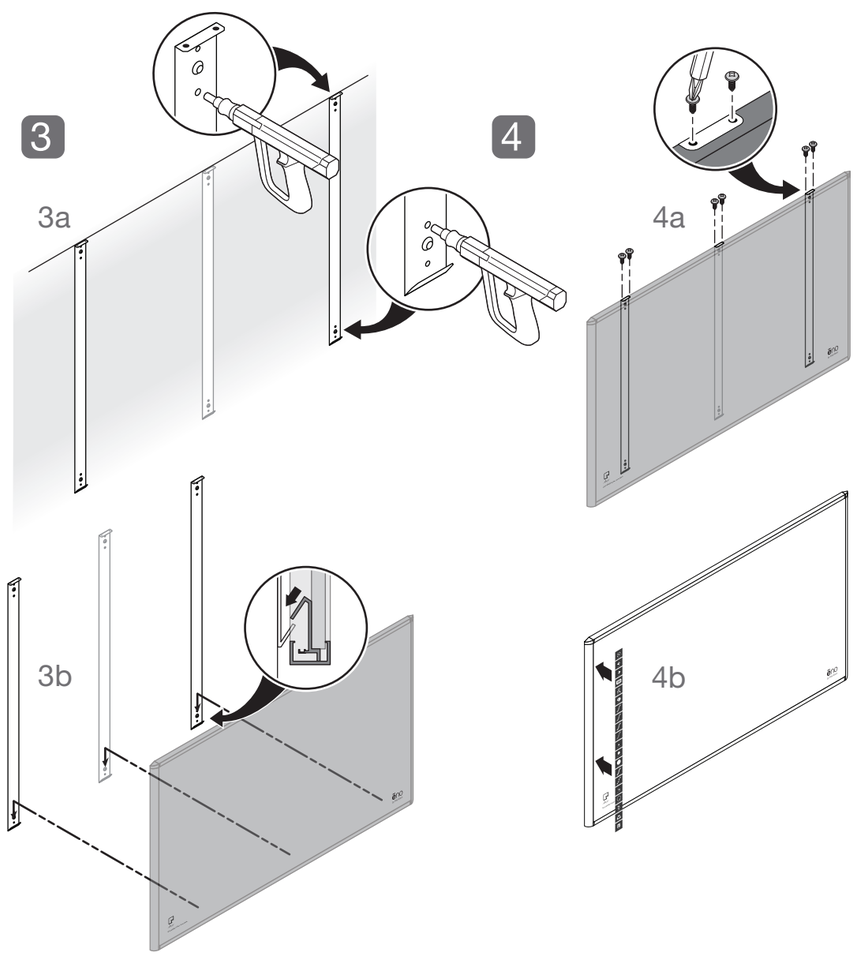


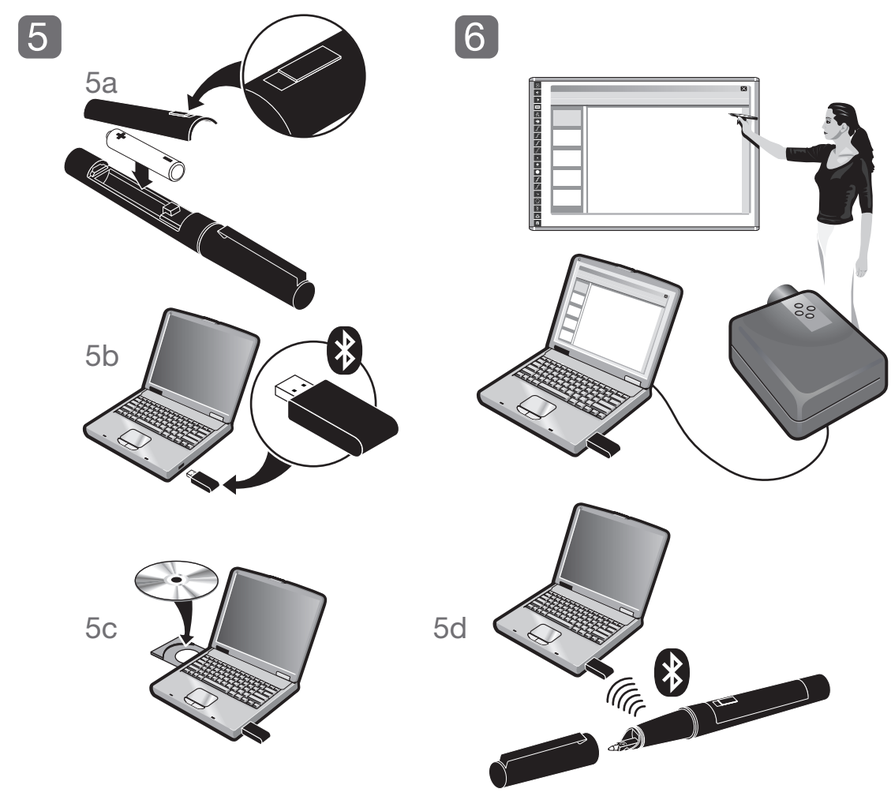


800.620.POLY | 678.542.3100 | +32.089.32.31.30

PN 370-0256-04